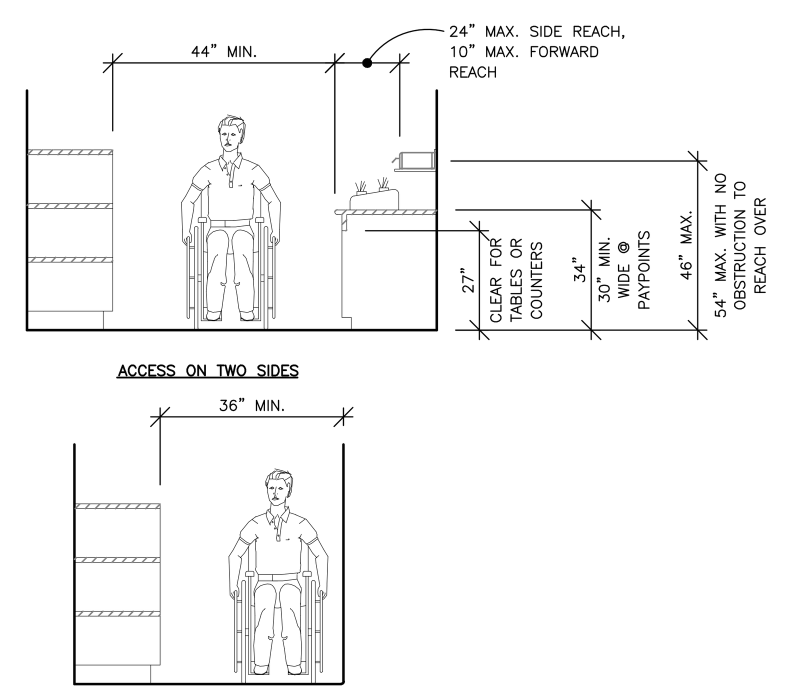

K1 AISLES

NO SCALE

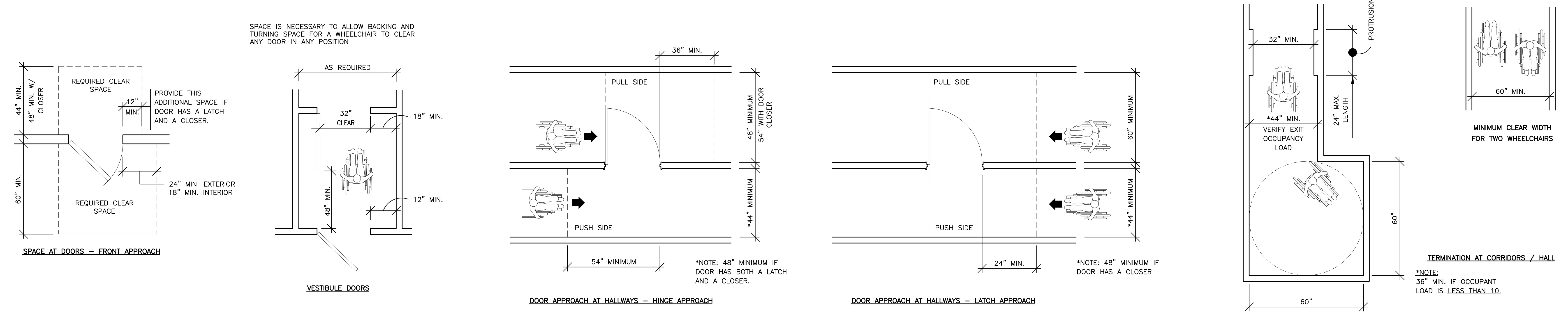

K3 DOOR OPENINGS AT CORRIDORS / HALLS

NO SCALE

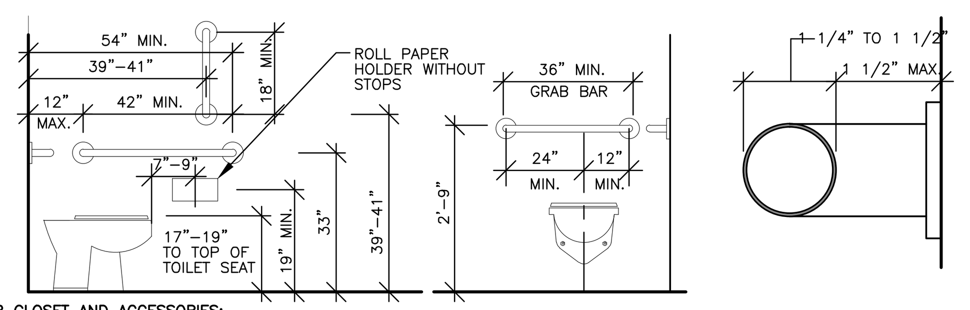

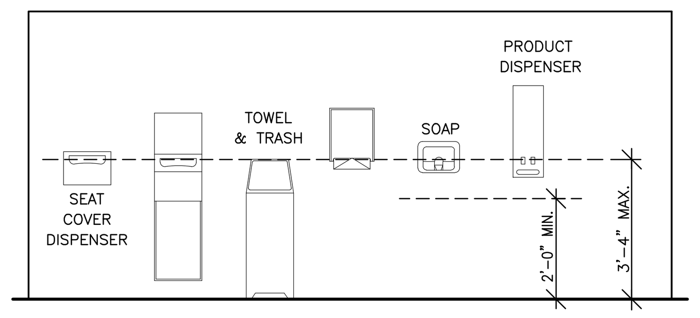

WATER CLOSET AND ACCESSORIES:

1. THE HEIGHT OF ACCESSIBLE WATER CLOSETS SHALL BE A MINIMUM OF 17" AND A MAXIMUM OF 19" MEASURED TO THE TOP OF A MAXIMUM 2" HIGH TOILET SEAT, EXCEPT THAT 3" SEATS SHALL BE PERMITTED ONLY IN ALTERATIONS WHERE THE EXISTING FIXTURE IS LESS THAN 15" HIGH.
2. THE CONTROLS FOR WATER CLOSET FLUSH VALVES SHALL BE MOUNTED ON THE WIDE SIDE OF THE TOILET AREAS. AUTOMATIC SPRING TO LIFTED POSITION SEATS ARE NOT ALLOWED.
3. THE FORCE REQUIRED TO ACTIVATE WATER CLOSET AND URINAL FLUSH VALVE CONTROLS, AND FAUCET AND OPERATING MECHANISM CONTROLS, SHALL BE NO GREATER THAN 5 LBF. ELECTRONIC OR AUTOMATIC FLUSHING CONTROLS ARE ACCEPTABLE AND PREFERABLE.
4. WHERE TOWEL, SANITARY NAPKINS, WASTE RECEPTACLES, DISPENSERS, OR OTHER EQUIPMENT AND CONTROLS ARE PROVIDED, PROVIDE AT LEAST ONE OF EACH TYPE SHALL BE ON AN ACCESSIBLE ROUTE, WITH ALL OPERABLE PARTS, INCLUDING COIN SLOTS, WITHIN 40" FROM THE FINISHED FLOOR.
5. THE TOILET TISSUE DISPENSERS SHALL BE LOCATED ON THE WALL WITHIN 12" OF THE FRONT EDGE OF THE TOILET SEAT, MOUNTED BELOW THE GRAB BAR AT A MINIMUM HEIGHT OF 19", AND 36" MAXIMUM TO THE FAR EDGE FROM THE REAR WALL. DISPENSERS THAT CONTROL DELIVERY OR THAT DOES NOT PERMIT CONTINUOUS PAPER FLOW SHALL NOT BE USED.

GRAB BARS:

1. THE REAR GRAB BARS SHALL BE 36" LONG MINIMUM AND EXTEND FROM THE CENTERLINE OF THE WATER CLOSET 12" MINIMUM ON ONE SIDE AND 24" MINIMUM ON THE OTHER SIDE. THE REAR GRAB BAR SHALL BE SECURELY ATTACHED AND CENTERED 33" ABOVE AND PARALLEL TO THE FLOOR, EXCEPT THAT WHERE A TANK–TYPE TOILET IS USED, WHICH OBSTRUCTS PLACEMENT AT 33", THE BAR MAY BE AS HIGH AS 36", WITH A 1–1/2" MINIMUM BETWEEN THE BAR AND TOP OF THE TANK.
2. THE DIAMETER OR WIDTH OF THE GRIPPING SURFACES OF A GRAB BAR SHALL BE 1–1/4" TO 1–1/2" NOMINAL, OR THE SHAPE SHALL PROVIDE AN EQUIVALENT GRIPPING SURFACE. IF GRAB BARS ARE MOUNTED ADJACENT TO A WALL, THE SPACE BETWEEN THE WALL AND THE GRAB BARS SHALL BE 1–1/2".
3. THE STRUCTURAL STRENGTH OF THE GRAB BARS, FASTENERS, AND MOUNTING DEVICES SHALL MEET THE FOLLOWING SPECIFICATIONS:
   A) BENDING STRESS IN A GRAB BAR OR SEAT INDUCED BY THE MAXIMUM BENDING MOMENT FROM THE APPLICATION OF A 250–LB POINT LOAD SHALL BE LESS THAN THE ALLOWABLE STRESS FOR THE MATERIAL OF THE GRAB BAR OR SEAT.
   B) SHEAR STRESS INDUCED IN A GRAB BAR OR SEAT BY THE APPLICATION OF A 250–LB POINT LOAD SHALL BE LESS THAN THE ALLOWABLE SHEAR STRESS FOR THE MATERIAL OF THE GRAB BAR OR SEAT, AND ITS MOUNTING BRACKET OR OTHER SUPPORT IS CONSIDERED TO BE FULLY RESTRAINED, THEN DIRECT AND TORSIONAL SHEAR STRESS SHALL NOT EXCEED THE ALLOWABLE SHEAR STRESS.
   C) SHEAR FORCE INDUCED IN FASTENER OR MOUNTING DEVICES FROM THE APPLICATION OF A 250–LB POINT LOAD SHALL BE LESS THAN THE ALLOWABLE LATERAL LOAD OF EITHER THE FASTENER OR MOUNTING DEVICE OR THE SUPPORTING STRUCTURE, WHICHEVER HAS THE SMALLER ALLOWABLE LOAD.
   D) TENSILE FORCE INDUCED IN A FASTENER BY A DIRECT TENSION FORCE OF A 250–LB POINT LOAD, PLUS THE MAXIMUM MOMENT FROM THE APPLICATION OF A 250–LB POINT LOAD, SHALL BE LESS THAN THE ALLOWABLE WITHDRAWAL LOAD BETWEEN THE FASTENER AND SUPPORTING STRUCTURE.
   E) GRAB BARS SHALL NOT ROTATE WITHIN THEIR FITTINGS.
4. THE GRAB BARS AND ANY WALL OR OTHER SURFACE ADJACENT TO IT SHALL BE FREE OF ANY SHARP OR ABRASIVE ELEMENTS. EDGES SHALL HAVE A MINIMUM RADIUS OF 1/8"

GENERAL NOTES

1. ACCESSIBILITY STANDARDS MAY VARY SLIGHTLY FROM THOSE SHOWN HERE ACCORDING TO THE REFERENCED STANDARDS OF THE APPLICABLE CODES, (ANSI A117.1 (U.B.C.)), THE YEAR OF THE CODE ADOPTED AT THE TIME OF THE ISSUANCE OF THE CERTIFICATE OF OCCUPANCY, THE LOCAL JURISDICTION REQUIREMENTS, THE CODE ITSELF AS STATED (TITLE 24 OF THE C.B.C., B.O.C.A. OR THE I.B.C.), THE REQUIREMENTS OF AN ADOPTED STATE LAW OR A PRECEDENT PREVIOUSLY SET FOR COMPLIANCE BY THE JUSTICE DEPARTMENT (A.D.A.).
2. IT IS THE CONTRACTOR'S RESPONSIBILITY TO INFORM THE ARCHITECT AND/OR THE CIVIL ENGINEER OF ANY DISCREPANCIES, SUBTLE OR OTHERWISE, FROM WHAT IS SHOWN HERE AND THE APPLICABLE CODE/LAW/ORDINANCE.
3. THESE DIAGRAMS ILLUSTRATE THE SPECIFIC REQUIREMENTS OF THESE REGULATIONS AND ARE INTENDED ONLY AS AID FOR BUILDING AND CONSTRUCTION.

FOR BID ONLY

D1 WATER CLOSET AND TOILET ACCESSORIES NOTES AND INFORMATION

1/4" = 1'–0"

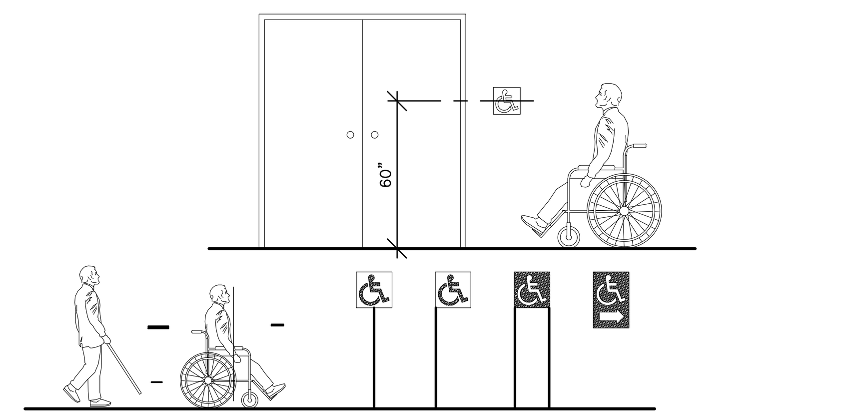

1. AT EVERY PRIMARY PUBLIC ENTRANCE AND AT EVERY MAJOR JUNCTION ALONG OR LEADING TO AN ACCESSIBLE ROUTE OF TRAVEL, THERE SHALL BE A SIGN DISPLAYING THE INTERNATIONAL SYMBOL OF ACCESSIBILITY. SIGNS SHALL INDICATE THE DIRECTION TO ACCESSIBLE BUILDING ENTRANCES AND FACILITIES.
2. WHEN A BUILDING CONTAINS AN ENTRANCE OTHER THAN THE MAIN ENTRANCE WHICH IS RAMPED OR LEVEL FOR USE BY DISABLED PERSONS, A SIGN SHOWING ITS LOCATION IS REQUIRED TO BE POSTED AT OR NEAR THE MAIN ENTRANCE.
3. PROVIDE SIGNS WITH INTERNATIONAL SYMBOL OF ACCESSIBILITY INDICATING LOCATION OF EACH ACCESSIBLE ENTRY. PROVIDE ADDITIONAL DIRECTIONAL SIGNS AS REQUIRED.
4. MAT CARPETING MUST BE SECURELY ANCHORED TO FLOOR OR RECESSED INTO DOOR LANDING.

G5 ENTRY AND DIRECTIONAL SIGNS

NO SCALE

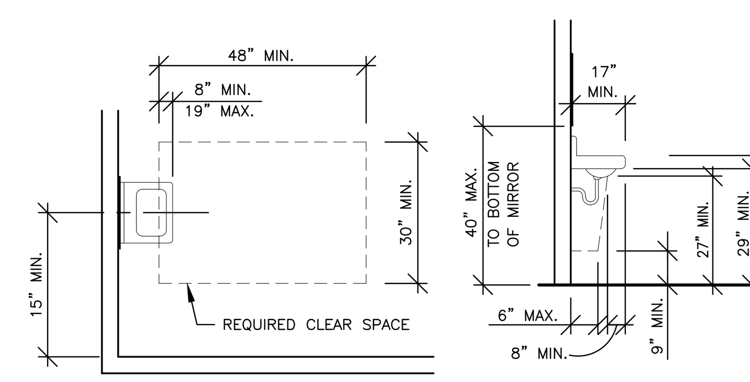

LAVATORY NOTES:

1. PROVIDE A CLEAR SPACE 30"x48" MIN. IN FRONT OF THE LAVATORY. THE CLEAR SPACE MAY EXTEND INTO KNEE AND TOE SPACE UNDER LAVATORY.
2. INSULATE OR CONFIGURE HOT WATER SUPPLY AND DRAIN PIPING UNDER LAVATORIES TO PREVENT CONTACT.
3. NO SHARP OR ABRASIVE ELEMENTS ARE ALLOWED UNDER LAVATORIES.
4. FAUCET CONTROLS AND OPERATING MECHANISMS ARE REQUIRED TO BE OPERABLE WITH ONE HAND AND CANNOT REQUIRE GRASPING, PINCHING, OR TWISTING OF WRIST. THE FORCE REQUIRED TO ACTIVATE CONTROLS IS NOT TO EXCEED 5 LBF. LEVER OPERATED, PUSH TYPE AND ELECTRONICALLY CONTROLLED MECHANISMS ARE EXAMPLES OF ACCEPTABLE DESIGN.
5. SELF CLOSING VALVES ARE ALLOWED IF THE FAUCET REMAINS OPEN FOR AT LEAST 10 SECONDS.

G7 LAVATORIES

NO SCALE

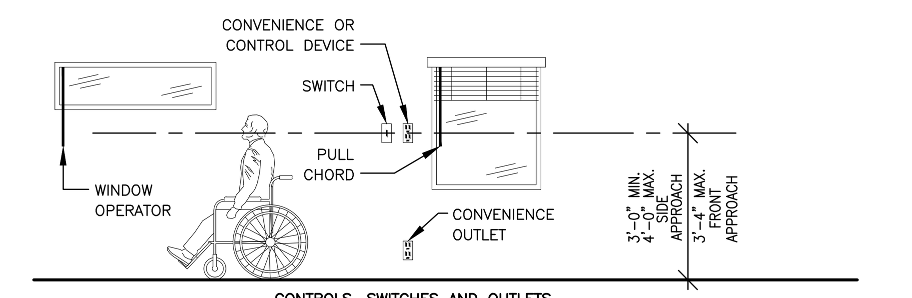

NOTES:

1. THE HIGHEST OPERABLE PART OF ALL CONTROLS, DISPENSERS, RECEPTACLES AND OTHER OPERABLE EQUIPMENT SHALL BE INSTALLED AT AN ACCESSIBLE LOCATION MEETING THE CLEARANCES AND REACH RANGE REQUIREMENTS OF ICC/ANSI A117.1, SECTIONS 308.2 & 308.3
2. CONTROLS AND SWITCHES INTENDED TO BE USED BY THE OCCUPANT OF THE ROOM OR AREA TO CONTROL LIGHTING AND RECEPTACLE OUTLETS, APPLIANCES, OR COOLING, HEATING AND VENTILATING EQUIPMENT, SHALL BE LOCATED NO MORE THAN 48 INCHES MEASURED FROM THE TOP OF THE OUTLET BOX NOR LESS THAN 15 INCHES MEASURED FROM THE BOTTOM OF THE OUTLET BOX TO THE LEVEL OF THE FINISH FLOOR OR WORKING PLATFORM.
3. ELECTRICAL RECEPTACLE OUTLETS ON BRANCH CIRCUITS OF 30 AMPERES OR LESS AND COMMUNICATION SYSTEM RECEPTACLES SHALL BE LOCATED NO MORE THAN 48 INCHES MEASURED FROM THE TOP OF THE RECEPTACLE OUTLET BOX OR RECEPTACLE HOUSING NOR LESS THAN 15 INCHES MEASURED FROM THE BOTTOM OF THE RECEPTACLE OUTLET BOX OR RECEPTACLE HOUSING TO THE LEVEL OF THE FINISH FLOOR OR WORKING PLAT-FORM.
4. EXISTING BUILDING MUST MEET SAME REQUIREMENTS AS NEW CONSTRUCTION UNLESS AN UNREASONABLE HARDSHIP IS GRANTED BY THE ENFORCING AGENCY.

G13 CONTROLS AND OPERATING MECHANISMS

1/4" = 1'–0"

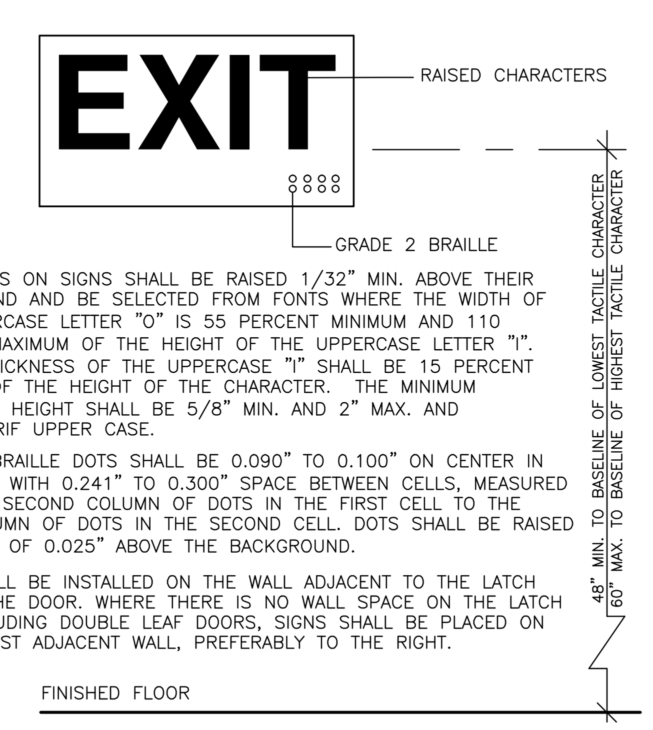

CHARACTERS ON SIGNS SHALL BE RAISED 1/32" MIN. ABOVE THEIR BACKGROUND AND BE SELECTED FROM FONTS WHERE THE WIDTH OF THE UPPERCASE LETTER "O" IS 55 PERCENT MINIMUM AND 110 PERCENT MAXIMUM OF THE HEIGHT OF THE UPPERCASE LETTER "I". STROKE THICKNESS OF THE UPPERCASE "I" SHALL BE 15 PERCENT MAXIMUM OF THE HEIGHT OF THE CHARACTER. THE MINIMUM CHARACTER HEIGHT SHALL BE 5/8" MIN. AND 2" MAX. AND SANS–SHERIF UPPER CASE.

GRADE 2 BRAILLE DOTS SHALL BE 0.090" TO 0.100" ON CENTER IN EACH CELL WITH 0.241" TO 0.300" SPACE BETWEEN CELLS, MEASURED FROM THE SECOND COLUMN OF DOTS IN THE FIRST CELL TO THE FIRST COLUMN OF DOTS IN THE SECOND CELL. DOTS SHALL BE RAISED A MINIMUM OF 0.025" ABOVE THE BACKGROUND.

SIGNS SHALL BE INSTALLED ON THE WALL ADJACENT TO THE LATCH OUTSIDE THE DOOR. WHERE THERE IS NO WALL SPACE ON THE LATCH SIDE, INCLUDING DOUBLE LEAF DOORS, SIGNS SHALL BE PLACED ON THE NEAREST ADJACENT WALL, PREFERABLY TO THE RIGHT.

FINISHED FLOOR

D5 EXIT TACTILE SIGN

1 1/2"=1'–0"

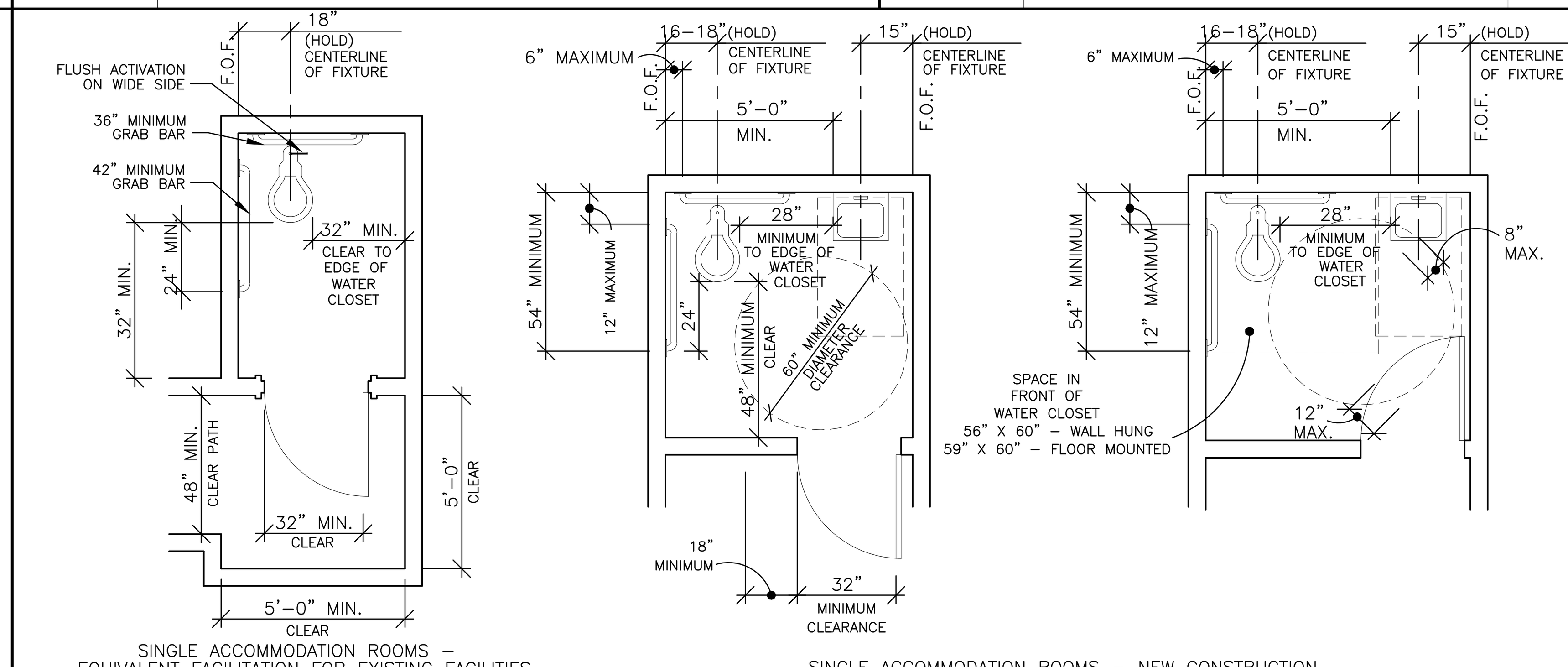

D7 RESTROOM / TOILET ROOMS

NOTE: SIDE TRANSFER MAY VARY DEPENDING ON STATE REQUIREMENTS.

1/4" = 1'–0"

CORRESPONDING REACH HEIGHTS FOR GIVEN DEPTHS:

WHEN D = 10" OR LESS, H = 54" MAX.
WHEN D = 11", H = 53.5" MAX.
WHEN D = 12", H = 53.0" MAX.
WHEN D = 13", H = 52.5" MAX.
WHEN D = 14", H = 51.5" MAX.
WHEN D = 15", H = 51.0" MAX.
WHEN D = 16", H = 50.5" MAX.
WHEN D = 17", H = 50.0" MAX.
WHEN D = 18", H = 49.5" MAX.
WHEN D = 19", H = 49.0" MAX.
WHEN D = 20", H = 48.5" MAX.
WHEN D = 21", H = 47.5" MAX.
WHEN D = 22", H = 47.0" MAX.
WHEN D = 23", H = 46.5" MAX.
WHEN D = 24", H = 46.0 " MAX.

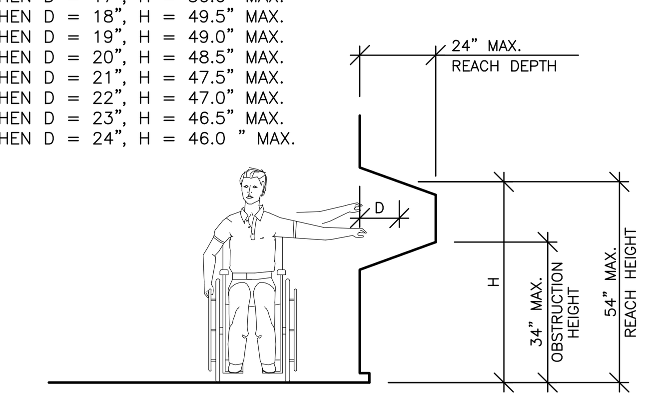

REACH RANGE LIMITS

A1 REACH RANGES

NO SCALE

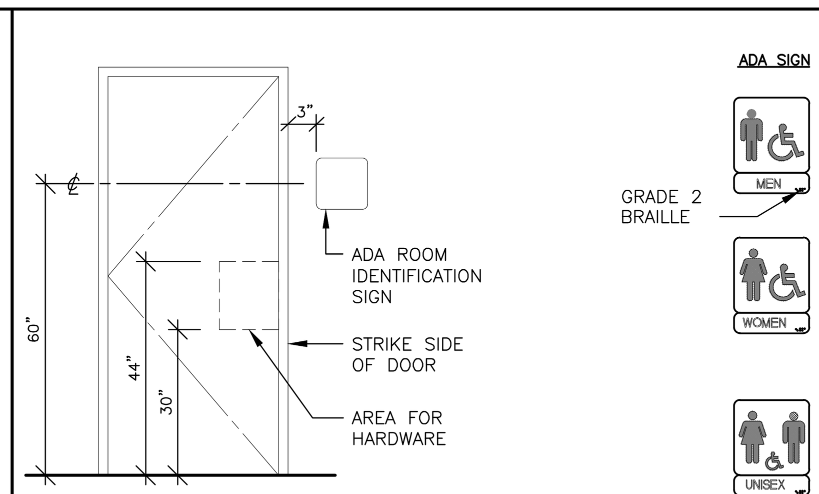

NOTES

1. CHARACTERS AND SYMBOLS SHALL CONTRAST WITH THEIR BACKGROUND.
2. IDENTIFICATION SYMBOLS ARE TO BE CENTERED ON DOOR 60" ABOVE FLOOR AND ARE TO BE DISTINCTLY DIFFERENT FROM THE DOOR IN COLOR AND CONTRAST.
3. PROVIDE ROOM IDENTIFICATION SIGN ON LATCH SIDE OF DOOR.
4. LETTERS & NUMBERS ON SIGNS SHALL BE RAISED 1/32" MIN., SHALL BE A MIN. OF 5/8" HIGH, A MAX. OF 2" HIGH, & SHALL BE SANS–SERIF UPPERCASE CHARACTERS ACCOMPANIED BY CONTRACTED GRADE 2 BRAILLE.

A3 RESTROOM SIGNS

NO SCALE

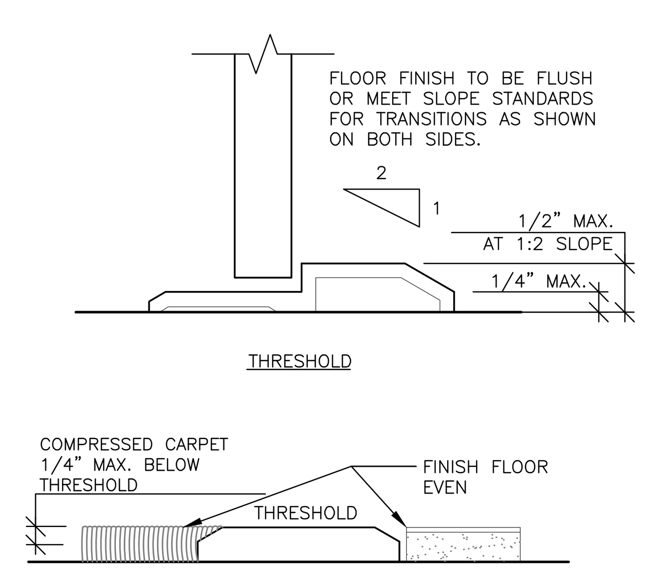

DOOR NOTES:

1. WHEN INSTALLED, DOORWAYS SHALL HAVE A MINIMUM CLEAR OPENING OF 32 INCHES WITH THE DOOR OPEN 90 DEGREES.
2. FOR HINGED DOORS, THE OPENING WIDTH SHALL BE MEASURED WITH THE DOOR POSITIONED AT AN ANGLE OF 90 DEGREES FROM ITS CLOSED POSITION.
3. WHERE A PAIR OF DOORS IS UTILIZED, AT LEAST ONE OF THE DOORS SHALL PROVIDE A CLEAR, UNOBSTRUCTED OPENING WIDTH OF 32 INCHES WITH THE LEAF POSITIONED AT AN ANGLE OF 90 DEGREES FROM ITS CLOSED POSITION.
4. THERE SHALL BE A LEVEL AND CLEAR FLOOR OR LANDING ON EACH SIDE OF A DOOR. THE LEVEL AREA SHALL HAVE A LENGTH IN THE DIRECTION OF DOOR SWING OF AT LEAST 60 INCHES AND THE LENGTH OPPOSITE THE DIRECTION OF THE DOOR SWING OF 48 INCHES AS MEASURED AT RIGHT ANGLES TO THE PLANE OF THE DOOR IN THE CLOSED POSITION. WHERE THE PLANE OF THE DOORWAY IS OFFSET OR LOCATED IN AN ALCOVE A DISTANCE MORE THAN 8 INCHES MEASURED FROM THE PLANE OF THE DOORWAY TO THE FACE OF THE WALL, THE DOOR SHALL BE PROVIDED WITH 60 INCHES MANEUVERING CLEARANCE FOR FRONT APPROACH.
5. THE WIDTH OF THE LEVEL AREA ON THE SIDE TO WHICH THE DOOR SWINGS SHALL EXTEND 24 INCHES PAST THE STRIKE EDGE OF THE DOOR FOR EXTERIOR DOORS AND 18 INCHES PAST THE STRIKE EDGE FOR INTERIOR DOORS. WHERE THE PLANE OF THE DOORWAY IS OFFSET 8 OR MORE INCHES FROM ANY OBSTRUCTION WITHIN 18 INCHES MEASURED LATERALLY ON THE LATCH SIDE, THE DOOR SHALL BE PROVIDED WITH MANEUVERING CLEARANCE FOR FRONT APPROACH.
6. PROVIDE CLEAR SPACE OF 12 INCHES PAST STRIKE EDGE OF THE DOOR ON THE OPPOSITE SIDE TO WHICH THE DOOR SWINGS IF THE DOOR IS EQUIPPED WITH BOTH A LATCH AND A CLOSER.
7. THE FLOOR OR LANDING SHALL NOT BE MORE THAN 1/2 INCH LOWER THAN THE THRESHOLD OF THE DOORWAY.
8. THE BOTTOM 10 INCHES OF ALL DOORS EXCEPT AUTOMATIC AND SLIDING SHALL HAVE A SMOOTH, UNINTERRUPTED SURFACE TO ALLOW THE DOOR TO BE OPENED BY A WHEELCHAIR FOOTREST WITHOUT CREATING A TRAP OR HAZARDOUS CONDITION. WHERE NARROW FRAME DOORS ARE USED, A 10 INCH HIGH SMOOTH PANEL SHALL BE INSTALLED ON THE PUSH SIDE OF THE DOOR WHICH WILL ALLOW THE DOOR TO BE OPENED BY A WHEELCHAIR FOOTREST WITHOUT CREATING A TRAP OR HAZARDOUS CONDITION.

DOOR HARDWARE NOTES:

1. DOOR HANDLES, PULLS, LATCHES, LOCKS, AND OTHER OPERATING DEVICES ON DOORS REQUIRED TO BE ACCESSIBLE SHALL NOT REQUIRE TIGHT GRASPING, TIGHT PINCHING OR TWISTING OF THE WRIST TO OPERATE. MANUALLY OPERATED BOLTS OR SURFACE BOLTS ARE NOT PERMITTED. THE UNLATCHING OF ANY DOOR OR LEAF SHALL NOT REQUIRE MORE THAN ONE OPERATION.
2. LATCHING AND LOCKING DOORS THAT ARE HAND ACTIVATED AND WHICH ARE IN A PATH TRAVEL SHALL BE OPERABLE WITH A SINGLE EFFORT BY LEVER TYPE HARDWARE, BY PANIC BARS, PUSH–PULL ACTIVATING BARS, OR OTHER HARDWARE DESIGNED TO PROVIDE PASSAGE WITHOUT REQUIRING THE ABILITY TO GRASP THE OPENING HARDWARE.
3. HAND–ACTIVATED DOOR OPENING HARDWARE SHALL BE CENTERED BETWEEN 30 INCHES AND 44 INCHES ABOVE THE FLOOR.
4. WHEN AN AUTOMATIC OR POWER ASSISTED DOOR OPERATOR IS UTILIZED TO OPERATE A PAIR OF DOORS, AT LEAST ONE OF THE DOORS SHALL BE CLEAR, UNOBSTRUCTED OPENING WIDTH OF 32 INCHES WITH THE DOOR POSITIONED AT AN ANGLE OF 90 DEGREES FROM ITS CLOSED POSITION. AUTOMATIC DOORS SHALL COMPLY WITH BHMA A156.10 OR BHMA A156.19.

EFFORT TO OPERATE DOORS:

1. THE MAXIMUM FORCE REQUIRED TO PUSH OR PULL OPEN A DOOR SHALL COMPLY WITH THE FOLLOWING:
   A. PUSH OR PULL FORCE FOR A HINGED DOOR SHALL BE MEASURED PERPENDICULAR TO THE DOOR FACE AT THE DOOR OPENING HARDWARE OR 30 INCHES FROM THE HINGED SIDE, WHICHEVER IS FARTHER FROM THE HINGE.
   B. PUSH OR PULL FORCE FOR A SLIDING DOOR OR FOLDING DOOR SHALL BE MEASURED PARALLEL TO THE DOOR AT THE DOOR PULL OR LATCH.
   C. COMPENSATING DEVICES OR AUTOMATIC DOOR OPERATORS COMPLYING WITH SECTION 1133B.2.3.2 MAY BE USED TO MEET THE MAXIMUM FORCE LIMITS:
      1) REQUIRED FIRE DOORS SHALL HAVE THE MINIMUM OPENING FORCE ALLOWABLE BY THE APPROPRIATE ADMINISTRATIVE AUTHORITY, NOT TO EXCEED 15 LBF.
      2) OTHER THAN REQUIRED FIRE DOORS, INTERIOR DOORS SHALL HAVE A MAXIMUM OPENING FORCE OF 5 LBF.
      3) OTHER THAN REQUIRED FIRE DOORS, EXTERIOR DOORS SHALL HAVE A MAXIMUM OPENING FORCE OF 5 LBF.

A5 DOORS

NO SCALE

GreenbergFarrow
1430 W. Peachtree St., Suite 200
Atlanta, GA 30309
t: 404 601 4000 f: 404 601 3980

COPYRIGHT NOTICE
This drawing is the property of the above referenced Professional and is not to be used for any purpose other than the specific project and site named herein, and cannot be reproduced in any manner without the express written permission from the Professional

ISSUE/REVISION RECORD

DATE	DESCRIPTION
01/19/15	PERMIT SET

PROFESSIONAL SEAL

PROFESSIONAL IN CHARGE
HUGHES THOMPSON

PROJECT MANAGER
OSCAR FLORES

QUALITY CONTROL
WARREN DRURY

DRAWN BY
ARMANDO MATA

PROJECT NAME

CIRCLE K STORES, INC.

COLORADO SPRINGS COLORADO

E. FOUNTAIN BLVD & ACADEMY PARK LOOP

CIRCLE K STORES INC.

PROJECT NUMBER
20130780

SHEET TITLE

ACCESSIBILITY STANDARDS NOTES/DETAILS

SHEET NUMBER

AS1.0-CS

CIRCLE K SOUTHWEST PROTOTYPE 4480 – 08/13/2013
Drawing Name: P:\2013\20130780\500 Construction Documents- CStore Fuel Can\Produced_AS1.0-EF_AccessibilityStandardsNotes.dwg Last Modified: Jan 20, 2015 – 10:44am Plotted on: Jan 20, 2015 – 10:45am by amata